Spincat SC-125 Swivel

Description:

The **Spincat** is a self-rotating swivel designed for coil tubing well service. The powerful rotating jets cover a large area for efficient cleaning. Jet reaction force powers rotation of the head. An internal fluid speed control maintains rotation speeds of 30 to 70 rpm. The Spincat uses a synthetic silicone viscous fluid for lubrication. The fluid is available from StoneAge as part number BJ 048-S.

The tool has a straight flow-through design with a leak-free high pressure seal so pump power is not wasted. It has a 7/8" AMMT inlet thread. The tool can be used at temperatures up to 200ÁC, and can be used with up to 30% HCL and Nitrogen injection. (Note: if used with HCL, flush tool with clean water after use.)

If the Spincat will be used with high external borehole pressures, make certain that the body of the tool is completely full of lubricating fluid; air pockets are compressible and this could lead to oil seal failure and loss of lubrication.

The Spincat can be used at operating pressures of 1000 to 5000 psi and flow rates of .5 to 1.25 bpm (21 to 53 gpm).

The standard nozzle head has five drilled ports; one at 15 degrees forward, two at 45 degrees forward and two at 90 degrees to the axis of rotation. Customized heads are available with variable drilled patterns to concentrate the flow in a particular direction.

Troubleshooting:

If the head will not rotate when at operating conditions, check head by hand to make sure it rotates freely. If it does not rotate freely by hand, the tool needs to be disassembled and repaired.

If the head rotates freely by hand, check the head configuration and calculate pressure loss thru the coil tubing. Check with your distributor or StoneAge to make certain there is enough jet torque to provide rotation.

If the head rotates too fast, clean out old lubricating fluid and replace with fresh lubricant.

Maintenance:

The Spincat uses synthetic silicone viscous fluid for a lubricant. To top off the tool with lubricant, follow steps below. If the tool is being rebuilt or the seal replaced, the lubricant should be poured directly into the body around the shaft before the inlet nut is installed. To replace the high pressure seal, follow the steps on the right.

1. Remove Port Screw (FT 026).

2. Remove the Inlet Nut.

3. Refill the Body with viscous fluid to 1/4" above the top of the upper Bearing.

4. Hold the Inlet nut at an angle with the Port Screw hole facing up. Thread Body onto Inlet Nut and tighten to 50 ft-lb.

5. Install Port Screw.

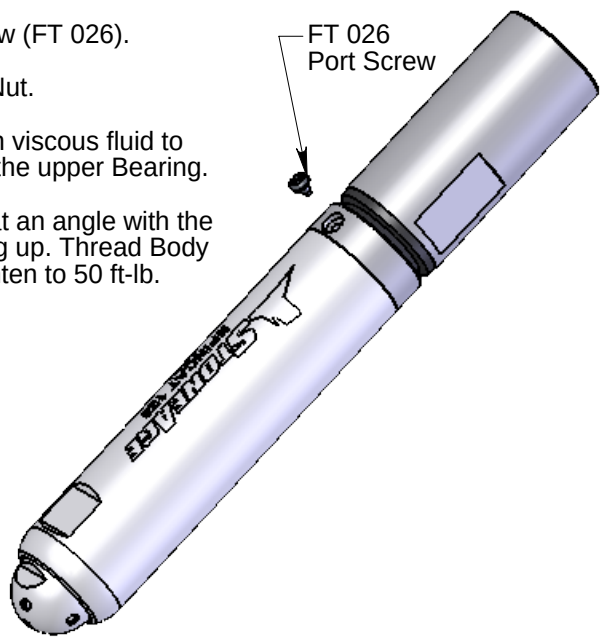

Available Maintenance Kits:

SC125 600 Service Kit (Includes items needed for maintenance)
SC125 602 Seal Kit (Includes parts needed for one seal change)
SC125 610 Overhaul Kit (Includes parts needed for tool rebuild)
SC125 612 Tool Kit (Includes tools to aid assembly)

Detailed View of Seat & H.P. Seal

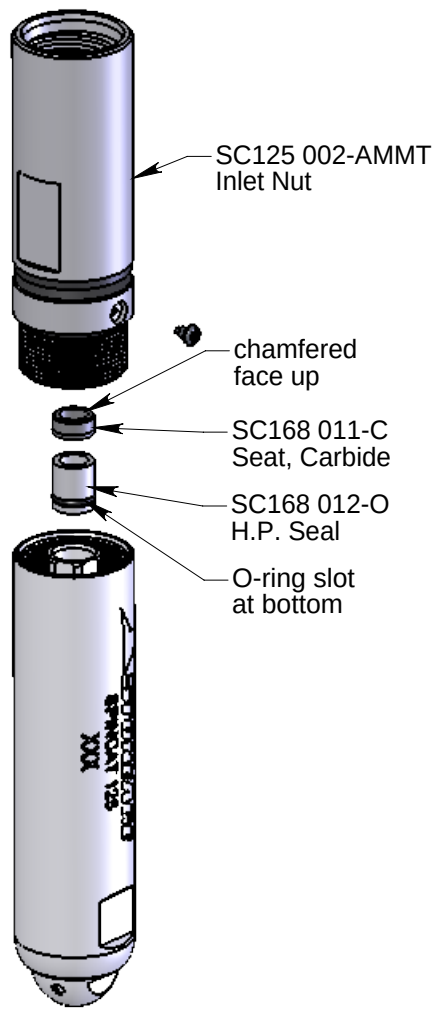

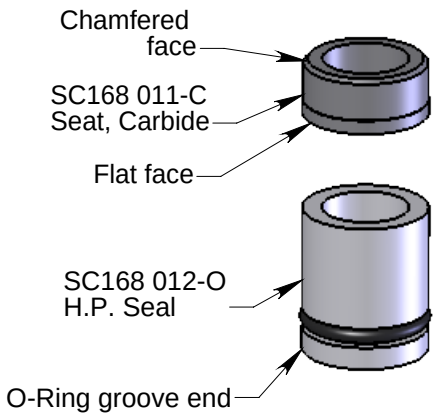

To replace the high pressure seal:

1. Unscrew the Inlet Nut (SC125 002-AMMT) and remove the Port Screw (FT 026).

2. Remove the old Seat (SC168 011-C) and H.P. Seal (SC168 012-O).

3. Apply grease to and install new H.P. Seal into the shaft with the O-Ring groove end going in first. Do not press all the way into the shaft bore.

4. Install new Seat (SC168 011-C) with the chamfered face toward Inlet Nut. Press in just far enough so that the seat is captured in the shaft bore.

4. Fill the body with viscous fluid to 1/4" above the top of the upper bearing.

5. Hold the Inlet nut at an angle with the Port Screw hole facing up. Thread Body onto Inlet Nut and tighten to 50 ft-lb.

6. Install Port Screw.

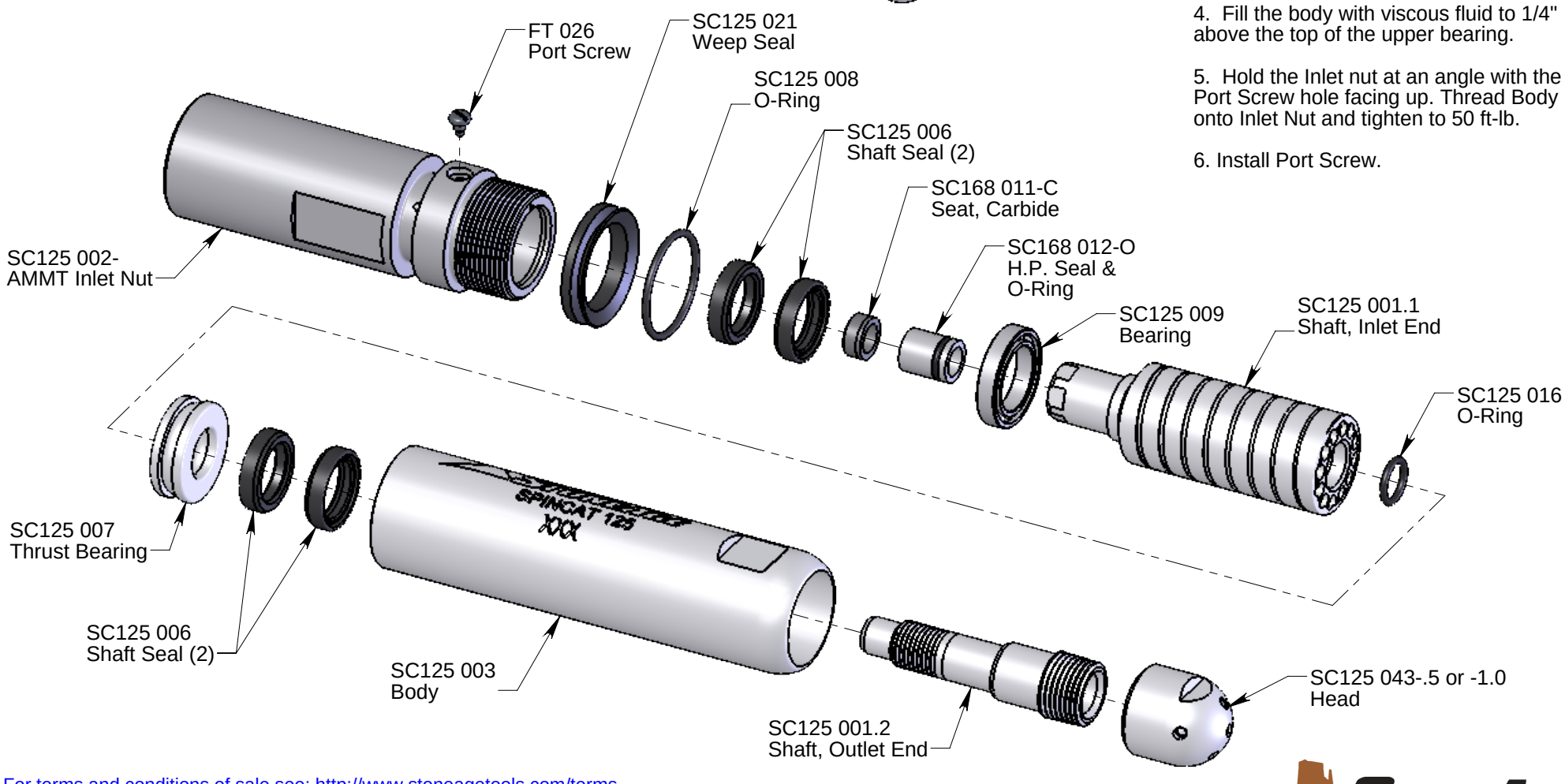

For terms and conditions of sale see: http://www.stoneagetools.com/terms
For limited warranty see: http://www.stoneagetools.com/warranty
For applicable patents see: http://www.sapatents.com

Spincat SC-125 Swivel

Disassembly:

1. Unscrew the Inlet Nut (SC125 002-AMMT) from the body.

2. Remove the Port Screw (FT 026) from the Nut.

3. Remove the Seat (SC168 011-C) and the H.P. Seal (SC168 012-O) from the bore of the shaft.

4. If the Shaft Seals (SC125 006) are damaged, remove them from the Nut using snap ring pliers.

5. If the O-Ring (SC125 008) is damaged, remove it from the Nut.

6. If the Weep Seal (SC125 021) is damaged, removed it from the Nut.

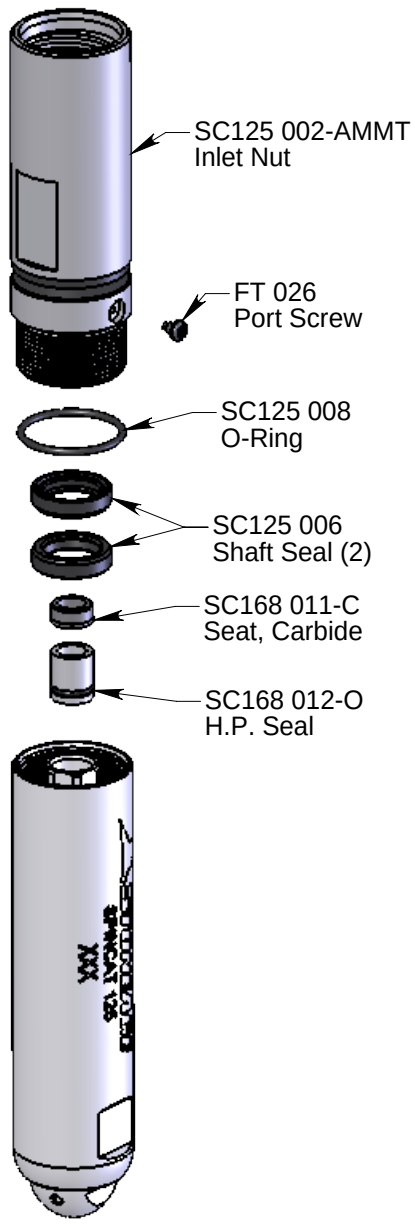

7. Unscrew the Inlet End Shaft (SC125 001.1) from the Outlet End Shaft/Head assembly and remove both from the Body.

8. Pull the Bearing (SC125 009) from the Inlet End Shaft.

9. If the O-Ring (SC125 016) is damaged, remove it from the bore of the Inlet End Shaft.

10. Remove the Thrust Bearing (SC125 007) from the Body.

11. If the Shaft Seals (SC125 006) are damaged, remove them from the Body.

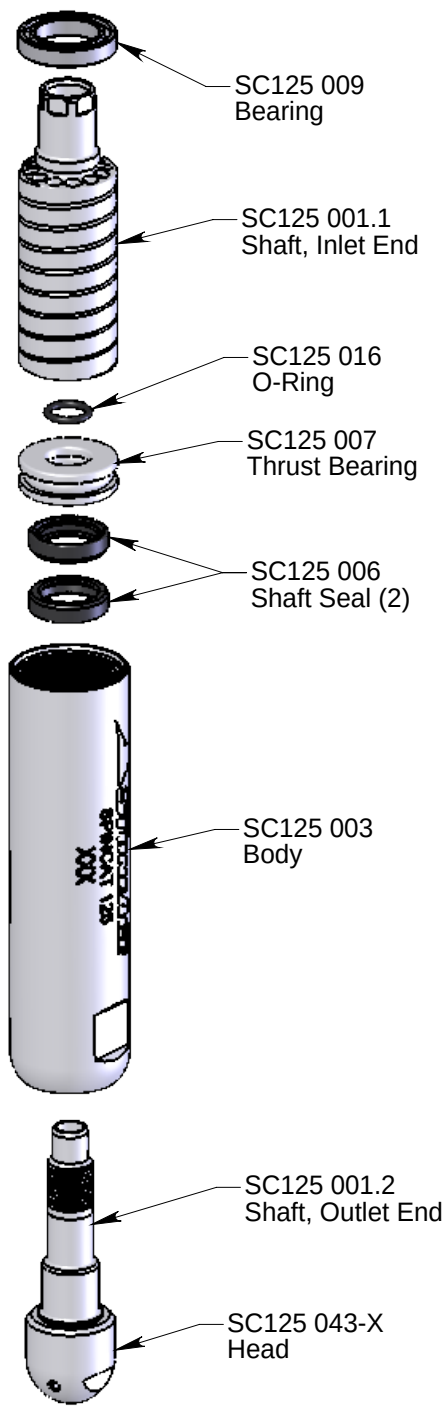

Assembly:

A StoneAge Seal Tool (SC125 050) is available to aid in installing the Seals in the Body and Nut.

1. Install Shaft Seals (SC125 007) into Body (SC125 003). Note direction of lip with spring on each Seal. Apply Armour-All to lips of seals.

2. Install Thrust Bearing (SC125 007) into Body. The end of the Bearing with the slightly larger bore (13mm) should go in facing down and towards the Seals as shown in detail.

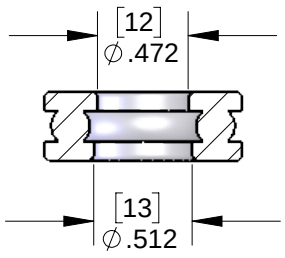

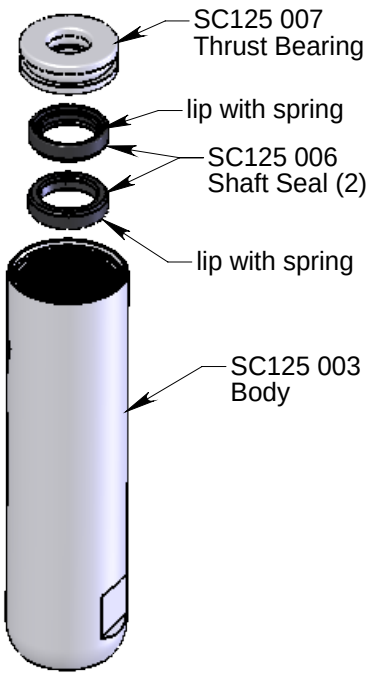

3. Install Weep Seal (SC125 021) into deep groove of Inlet Nut (SC125 002-AMMT). Angled lip should be towards Port Screw hole.

4. Install O-Ring (SC125 008) onto relief groove behind threads of Inlet Nut (SC125 002-AMMT).

5. Install Shaft Seals (SC125 006) into Inlet Nut. Note direction of lip with spring on each Seal. Apply anti-seize to Inlet Nut threads. Apply Armour-All to lips of seals.

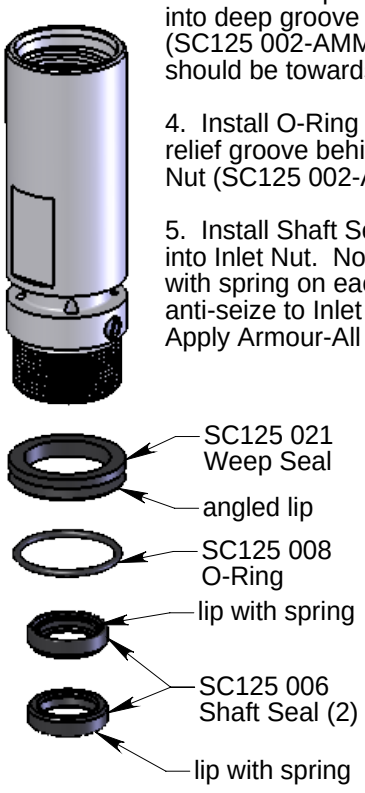

6. Thread the Head (SC125 043-X) onto Outlet End Shaft (SC125 001.2). Use Threadmate and fluorocarbon tape on the pipe threads.
NOTE: there is a 1/4" hex on the inside diameter of the Shaft for holding the Shaft when tightening. Tighten to 30 ft-lbs. Apply anti-seize to straight threads of the Shaft.

7. Install O-Ring (SC125 016) into internal groove in outgoing bore of the Inlet End Shaft (SC125 001.1). Apply grease to O-Ring.

8. Slide Head/Shaft assembly into the rounded end of the Body. Slide the Inlet End Shaft into the threaded end of the body and tighten shafts together to 30 ft-lbs.

9. Slide Bearing (SC125 009) into inlet end of Body.

10. Fill the tool with silicone lubricant to 1/4" above top of Bearing.

11. Install the H.P. Seal and Seat as shown in the Maintenance Section and thread the Body onto the Inlet Nut. Tighten to 50 ft-lbs.

12. Install Port Screw. (FT 026).

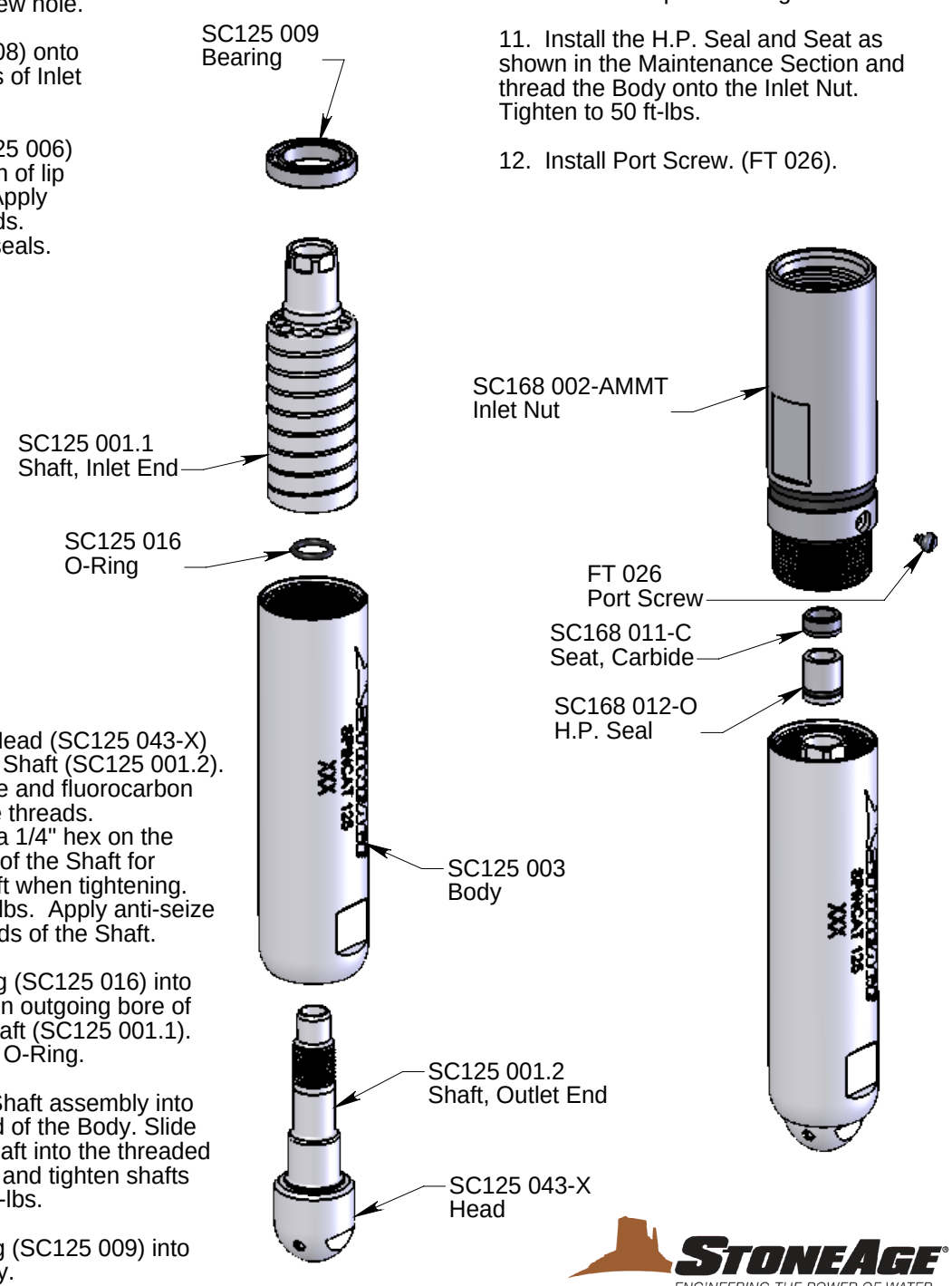

PL 625 É 06/14/2017 StoneAge®, All Rights Reserved